CORE
Ceiling Lamp

Article number:	4045620900000
EAN:	5905840266171
Light source:	5xE27 Max.60W
LED power W:	N/A
AC voltage:	220-240V
Luminous power lm:	N/A
Color temperature K:	N/A
Color rendering index CRI:	N/A
IP protection class:	IP20
Protection class:	2
Up&Down system:	N/A
Touch dimmer:	N/A
Click&Dimm system:	N/A
Magnetic mounting:	N/A
LED lighting method:	N/A
Lamp material:	Metal, Stained pine
Lamp color:	Black, Walnut
Lampshade No.:	N/A
Lampshade material:	N/A
Lampshade color:	N/A
Cable material:	N/A
Cable color:	N/A
CE Declaration:	Download
FSC certificate:	FSC-C129231
Lamp dimensions	
Height (mm):	185
Width (mm):	95
Length (mm):	900
Diameter (mm):	
Net weight kg:	4,00
Gross weight kg:	4,55
Dimensions of carton No.1	
Height (mm):	130
Width (mm):	170
Length (mm):	920
Dimensions of carton No.2	
Height (mm):	N/A
Width (mm):	N/A
Length (mm):	N/A
Dimensions of carton No.3	
Height (mm):	N/A
Width (mm):	N/A
Length (mm):	N/A



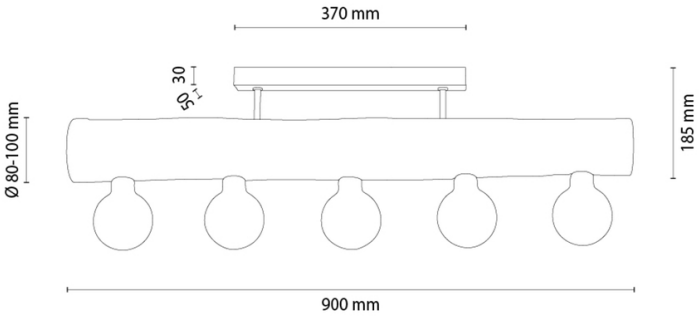

Made in Poland · 5 Years Guarantee