LOGAN
Table lamp

Article number:	7017411711535
EAN:	5905840262340
Light source:	1xE27 Max.40W
LED power W:	N/A
AC voltage:	220-240V
Luminous power lm:	N/A
Color temperature K:	N/A
Color rendering index CRI:	N/A
IP protection class:	IP20
Protection class:	2
Up&Down system:	N/A
Touch dimmer:	N/A
Click&Dimm system:	N/A
Magnetic mounting:	N/A
LED lighting method:	N/A
Lamp material:	Metal, Oak wood
Lamp color:	Nickel Matt, Oiled Oak
Lampshade No.:	A1535
Lampshade material:	Jacquard fabric
Lampshade color:	White
Cable material:	Fabric
Cable color:	Anthracite
CE Declaration:	Download
FSC certificate:	FSC-C129231
Lamp dimensions	
Height (mm):	520
Width (mm):	240
Length (mm):	360
Diameter (mm):	
Net weight kg:	2,37
Gross weight kg:	3,65
Dimensions of carton No.1	
Height (mm):	430
Width (mm):	330
Length (mm):	330
Dimensions of carton No.2	
Height (mm):	n/a
Width (mm):	n/a
Length (mm):	n/a
Dimensions of carton No.3	
Height (mm):	n/a
Width (mm):	n/a
Length (mm):	n/a



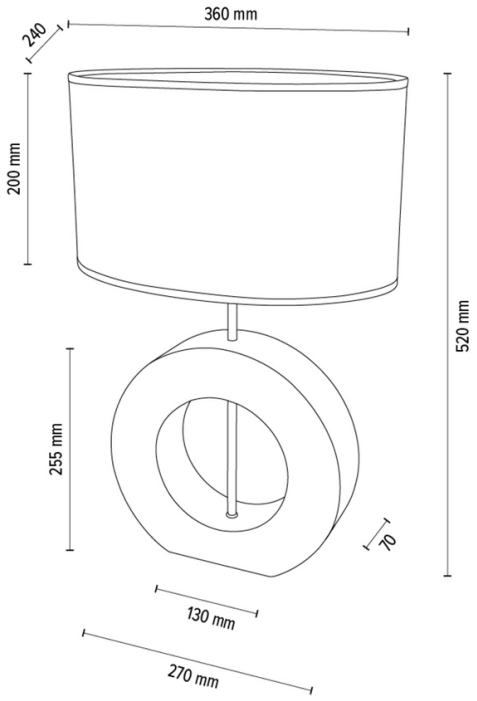

Made in Poland · 5 Years Guarantee