TWIN
Pendant Lamp

Article number:	1037413400000
EAN:	5905840259739
Light source:	3x LED 24V Integrated
LED power W:	23W
AC voltage:	220-240V
Luminous power lm:	1654 lm
Color temperature K:	3000K
Color rendering index CRI:	CRI ≥ 80
IP protection class:	IP20
Protection class:	2
Up&Down system:	YES
Touch dimmer:	YES
Click&Dimm system:	N/A
Magnetic mounting:	N/A
LED lighting method:	Direct & Indirect LED lighting
Lamp material:	Metal, Oak wood
Lamp color:	Nickel Matt, Oiled Oak
Lampshade No.:	N/A
Lampshade material:	N/A
Lampshade color:	N/A
Cable material:	Metal/PVC
Cable color:	Metal/Transparent
CE Declaration:	Download
FSC certificate:	FSC-C129231
Lamp dimensions	
Height (mm):	1400
Width (mm):	66
Length (mm):	1000
Diameter (mm):	
Net weight kg:	1,85
Gross weight kg:	2,23
Dimensions of carton No.1	
Height (mm):	110
Width (mm):	120
Length (mm):	1060
Dimensions of carton No.2	
Height (mm):	n/a
Width (mm):	n/a
Length (mm):	n/a
Dimensions of carton No.3	
Height (mm):	n/a
Width (mm):	n/a
Length (mm):	n/a



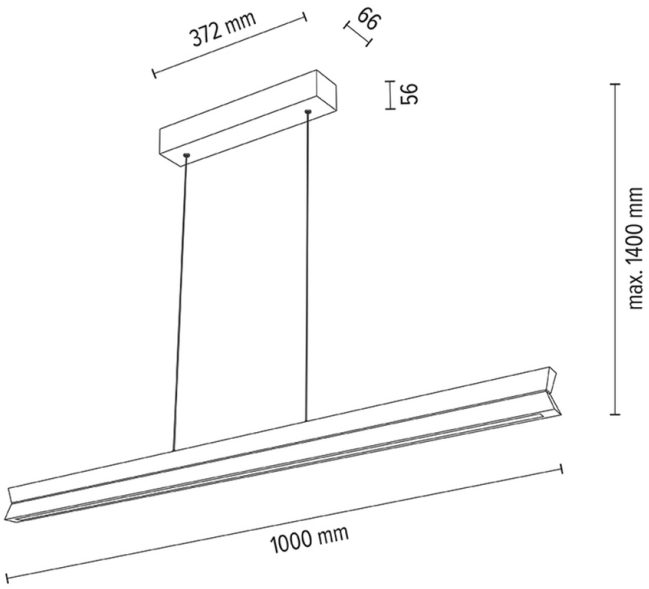

Made in Poland · 5 Years Guarantee